SIL SAFETY MANUAL

SMART TEMPERATURE TRANSMITTER

LI-24ALW Safety

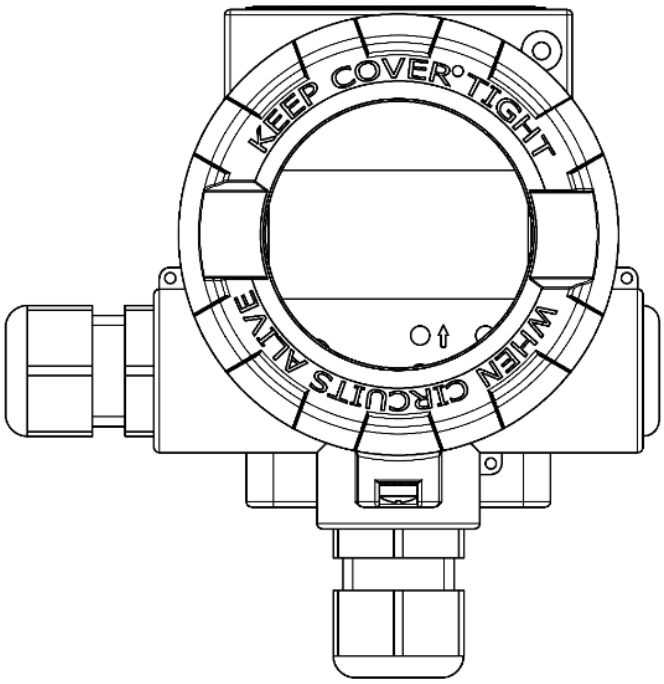

APLISENS S.A., 03-192 Warsaw, Morelowa 7 St.
tel. +48 22 814 07 77; fax +48 22 814 07 78
www.aplisens.com, e-mail: export@aplisens.com

PRODUCT CODE – see section **5.2 of the User's Manual**.
The QR code or ID number identifies the transmitter and provides quick access to the following documentation on the manufacturer's website: user's manual, SIL safety manual, explosion-proof device user manual, declarations of conformity and copies of certificates.

LI-24ALW Safety

ID:0080 0000 0000 0000 0000 0000 0003 68
https://id.aplisens.pl/00800000000000000000000000000368

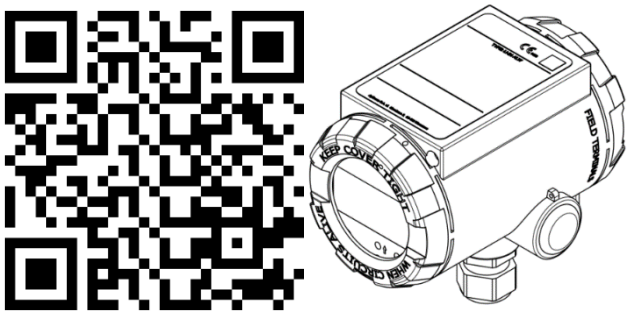

LI-24ALW Safety (Exi)

ID: 0080 0000 0000 0000 0000 0001 0003 19
https://id.aplisens.pl/00800000000000000000000001000319

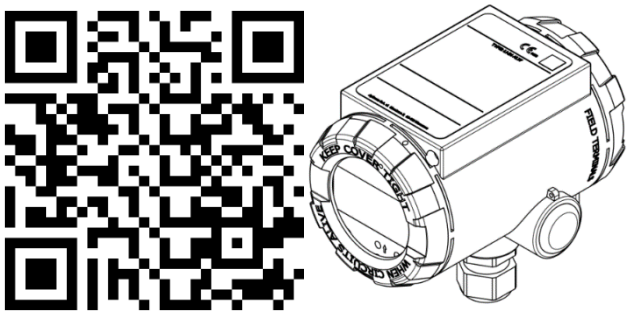

LI-24ALW Safety (Exd)

ID: 0080 0000 0000 0000 0000 0002 0003 67
https://id.aplisens.pl/00800000000000000000000002000367

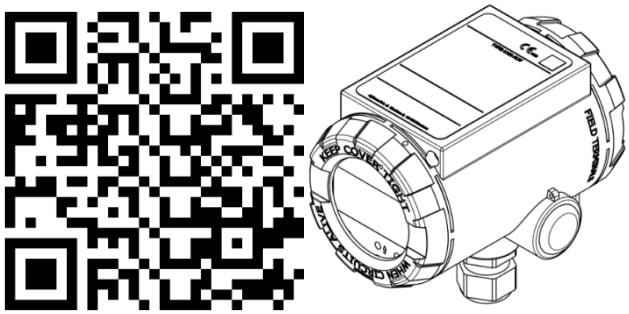

Symbols used

Symbol	Description
	Warning to proceed strictly in accordance with the information contained in the documentation in order to ensure the safety and full functionality of the device.

BASIC FUNCTIONAL SAFETY REQUIREMENTS



The manufacturer will not be liable for damages resulting from incorrect installation, failure to maintain suitable technical condition of the device or use of the device other than for its intended purpose.

Installation should be carried out by qualified staff having the required authorizations to install electrical and I&C equipment. The installer is responsible for performing the installation in accordance with manual as well as with the electromagnetic compatibility and safety regulations and standards applicable to the type of installation.

The E/E/PE safety-related system should be configured in accordance with the application. Improper configuration may cause malfunction leading to a E/E/PE safety-related system failure or accident.

All safety and protection requirements must be observed during installation, operation and inspections of the E/E/PE safety-related system.

If the E/E/PE safety-related system is found to malfunction, disconnect it from the system and hand over to the manufacturer for repair.
In order to minimize the risk of malfunction and associated risk to staff, the E/E/PE safety-related system is not to be installed or used in particularly unfavourable conditions, where the following hazards occur:

- possible mechanical impacts, excessive shocks and vibration;
- excessive temperature fluctuation;
- water vapour condensation, dusting, icing.



For operation in functional safety loop LI-24ALW Safety transmitters shall be configured for the output signal of 4 … 20 mA. HART protocol can be used for diagnostics and transmitter configuration at a work station. After configuring and commissioning the functional safety system, use only the analogue current output signal. For safety reasons, access to the transmitter enabling modifying settings by unauthorised access must be prevented. The transmitters can be protected by software features from settings change.

Changes made to the manufacturing of products may be introduced before the paper version of the manual is updated. The up-to-date manuals are available on the manufacturer's website: www.aplisens.com.

TABLE OF CONTENTS

1. DEFINITIONS AND ACRONYMS 5
2. GENERAL INFORMATION 6
2.1. Technical parameters 6
3. DESCRIPTION OF SAFETY REQUIREMENTS AND RESTRICTIONS . 6
3.1. Alarms 7
3.2. Restrictions 8
3.3. Notes on cybernetic security 8
4. REPAIR 9
5. RELIABILITY DATA 9
5.1. Reliability data of temperature transmitter 9
5.2. Failure mode of temperature sensors 10
5.3. Examples of damage intensity factors in temperature sensors 11
6. HISTORY OF REVISION 12
APPENDIX A. SAFETY FUNCTION TESTS (PROOF TESTS) 13
APPENDIX B. THE PROOF TEST BLOCK DIAGRAM 17

LIST OF TABLES

Table 1. Technical parameters of LI-24ALW Safety transmitters 6
Table 2. Operating (ambient) temperatures for LI-24ALW Safety transmitters 6
Table 3. Reliability data for LI-24ALW Safety 9
Table 4. Intervals of periodic tests for LI-24ALW Safety 10
Table 5. Detection of sensor failure in temperature transmitters LI-24ALW Safety 11
Table 6. Failure intensity factors for a resistance sensor 2-wire or 3-wire with close connection without a temperature transmitter 11
Table 7. Failure intensity factors for a resistance sensor 2-wire or 3-wire with distance connection without a temperature transmitter 11
Table 8. Failure intensity factors for a resistance sensor 4-wire with close connection without a temperature transmitter 12
Table 9. Failure intensity factors for a resistance sensor 4-wire with distance connection without a temperature transmitter 12
Table 10. Failure intensity factors for thermocouples with close connection without a temperature transmitter 12
Table 11. Failure intensity factors for thermocouples with distance connection without a temperature transmitter 12

1. DEFINITIONS AND ACRONYMS

SIL – Safety Integrity Level. This is a discrete level, 1 out of 4 possible levels, corresponding to a range of safety integrity values, where safety integrity level 4 is the highest safety integrity level and safety integrity level 1 is the lowest safety integrity level.

SFF – Safe Failure Fraction. Percentage of safe failure/defects which cannot cause a system failure. The higher the value, the lower the probability of a dangerous system failure.

DC – Diagnostic Coverage. Measure of system capability to detect dangerous failures. The ratio between detected dangerous failure rates and the all dangerous failure rate of all failures in the system.

PFH – probability of dangerous failure per hour.

PFD_{avg} – average probability of dangerous failure on demand. Mean probability that the safety function will not be performed in the operation mode on demand.

MTBF – Mean Time Between Failures. Describes the operation time between two consecutive component failures. MTBF refers to equipment reliability.

HFT – Hardware Failure Tolerance. Equipment capability to continue performing the required safety function despite occurring failures.

MTTR – Mean Time To Repair. Average time between a failure occurrence and repair completion. MTTR includes the time necessary to detect a failure, begin and complete a repair.

MRT – expected total repair time (does not include time for fault detection).

FMEDA – Failure Modes Effects and Diagnostics Analysis. Detailed analysis of different emergency modes and equipment diagnostic capabilities.

ALARM_L – diagnostic alarm state in which I_ALARM_L current is lower than 3,600 mA.

FIT – Failure In Time. The value defined as the failure rate (λ) per billion hours.

λ – failure rate. Defines the number of system failures per time unit.
λ_{SD} – failure rate of safe detectable failures.
λ_{SU} – failure rate of safe undetectable failures.
λ_{DD} – failure rate of dangerous detectable failures.
λ_{DU} – failure rate of dangerous undetectable failures.
λ_{NE} – failure rate of failures with no effect.
λ_{total} – total failure rate (the sum of all component failure rates).

2. GENERAL INFORMATION

The safety function of the **LI-24ALW Safety** transmitter is the measurement of temperature with the assumed precision and accuracy. This measurement controls the current proportionally in a 2-wire current loop 4 … 20 mA.

The standard, intrinsically safe Exi and flameproof Exd versions of **LI-24ALW Safety** series transmitters are used for measurement in systems ensuring the **SIL2** safety integrity level in accordance with **PN-EN 61508:2010**.

2.1. Technical parameters

Table 1. Technical parameters of LI-24ALW Safety transmitters

Version	Min power supply	Max power supply
Exi*	**11 V DC**	**30 V DC**
Standard, Exd*	**11 V DC**	**36 V DC**
* For details on intrinsically safe and flameproof version see manual EN.IX.LI.24.ALW.		

Table 2. Operating (ambient) temperatures for LI-24ALW Safety transmitters

Standard version (min; max)	Exi version (min; max)	Exd version (min; max)
-25÷ 85°C	-25 ÷ 80°C *	-25 ÷ 75°C *
* In the case of version certified according to ATEX and IECEx, due to possible limitation, the maximum operating temperature of the transmitter is given in the Explosion-Proof Device instruction EN.IX.LI.24.ALW.		

3. Description of safety requirements and restrictions

Under the following operating conditions, the safety function is not guaranteed:



- during configuration the transmitter using HART® communication;
- when HART multi-drop is active;
- during simulating states using HART communication;
- during EMC immunity tests;
- when write protection is disabled.

The transmitter configured to operate in a functional safety loop after the necessary settings related to its identification, metrology and alarm modes **must** have write protection set by means of the HART protocol, made via Raport 2 or other software using DDL or DTM libraries.

HART® is a registered trademark of FieldComm Group.

The acceptable FMEDA safe measurement error margin of the analog current output for “No Effect” errors is: **1%**.
Maximum time to complete a full diagnostic cycle: **5 minutes**.
Lifetime: **50 years**, determined based on component wear.
The lifetime does not apply to process connections and RTD/TC sensors.

3.1. Alarms

The LI-24ALW Safety series transmitter is fitted with an alarm system activated when hazardous conditions are detected by internal diagnostics.

The transmitter diagnostics detects the following hazardous conditions:

- failure of FLASH and RAM memory of the CPU microcontroller;
- overflow of CPU microcontroller stack;
- error in transmission with the ADC measuring the process value (failure of the digital signal transmission path through a galvanic barrier);
- too low transmitter power supply voltage;
- exceeding the threshold values of the power supply in the CPU microcontroller circuits;
- exceeding the threshold values of the power supply in the circuits of the ADC converter measuring the process value;
- failure of the ratiometric references or their excessive drift;
- failure or excessive drift of the reference voltage sources;
- failure of integrity of the CPU program execution;
- failure of components or connections between them in the of the ADC measurement path and power supplies in the sensor measurement area;
- failure of components or connections between them in D/A and U/I processing path;
- exceeding the permissible limit of 1% between the setpoint (process) current and the value measured in the 4 … 20 mA loop;
- exceeding the limit operating temperatures of the ADC converter measuring the process value;
- failures by short-circuiting or disconnecting any of the temperature sensor(s) connection branches to the transmitter.

The transmitter diagnostics shall **not detect** the following:

- temperature measurement errors resulting from failure of a measuring sensor in single or dual sensor configurations, if, despite a sensor failure consisting in a falsification of the measurement value, the electrical continuity of connections to the sensor is maintained;
- excessive vibration or impacts, unless resulting in destruction of internal components or electrical connections causing failures analysed in FMEDA.

Due to the nature of the power supply and the electrical interface of the transmitter, an alarm current level is used for signalling alarm states.
In the diagnostic alarm mode, the transmitter shall issue the nominal current with value: **I_ALARM_L = 3,600 mA – E**, where E is assumed in FMEDA an acceptable 1% safe fault, equivalent to ±0,160 mA DC in current loop. Finally, the nominal current set point in the ALARM_L mode should be 3,440 mA.
Transmitter diagnostics does not apply current alarm mode above the range of 20,500 mA. However, a small part of the failures may not be detected by the internal diagnostics and may cause an increase of the process current above 20,500 mA + E, where E is the acceptable 1% safe fault assumed in FMEDA, equivalent to ±0,160 mA DC in the current loop.
For this reason, when setting up the PLC for working with the transmitter, the current level above 20,660 mA should be considered as Dangerous Detected (detectable dangerous failure).
In critical alarm mode, the current value I_ALARM_L is less than **0,300 mA**.



Diagnostic alarms are permanently enabled and are not configurable.

In case of critical alarms, the microcontroller immediately transfers control to an infinite loop, triggering an independent WDT_SIL watchdog with a time discriminator. Without refreshing, the WDT_SIL will within 2 seconds disconnect the transmitter's main electronics from power supply causing a drop of current below 0,3 mA. This condition will continue until the transmitter is fully disconnected from the power and then reconnected.

The causes of critical alarms are:

- error of floating-point mathematical calculations;
- RAM memory failure detection;
- FLASH memory failure detection;
- CPU registry error detection;
- discrepancy of 3 successive current loop measurements with the value of setpoint current;
- disruption of the program automaton resulting in exceeding the WDT_SIL refresh time window;
- exceeding the lower threshold of the CPU microcontroller power supply voltage.

Diagnostic alarm states (except critical) can be read via **HART** communication. The Raport 2 software or other software using DDL/DTM libraries allows for more accurate identification of the cause of the alarm.

3.2. Restrictions

The restrictions on the use of the LI-24ALW Safety series transmitters in functional safety systems include the following:

- the measuring transmitter **must** be adapted for the application in terms of the operating conditions;
- the permissible operating ranges of the transmitter **must not be exceeded**;
- a faulty transmitter must be replaced **immediately** after a failure is found.

3.3. Notes on cybernetic security

Industrial control systems that have already worked as isolated systems are now based on open platforms, have contact points with an enterprise data communication system and use communications via public Internet or most often poorly protected networks. Taking into account cyber security after making the necessary transmitter settings related to its identification, metrology and alarm modes, the transmitter must have enabled remote (by HART) write protection and local setpoint change protection.

After configuring and commissioning the functional safety system, use only the analogue current output signal. The responsibility for cybersecurity rests with the system operator who must provide a safe connection between the E/E/PE safety-related system and the plant network. The operator shall establish and maintain any appropriate means of authentication, encryption and installation of any appropriate software to protect the automation system against any security breach, unauthorised access, tampering, intrusion, corruption or data theft.

If, as a result of cyber-attack, the threshold number of unauthorised access attempts to change the password or write protection is exceeded, an alarm will be triggered in the transmitter. Access to the lockout disable function is protected by the 32-bit password (4,3 billion combinations). After 5 unauthorised access attempts, an alarm is triggered until the transmitter software or hardware reset.

Aplisens S.A. and its subsidiaries shall not be liable for any damages and/or loss related to such safety breaches, such as unauthorised access, tampering, intrusion, data or information leak and/or theft.

4. Repair

No repairs or alterations to the transmitter electronic system are permitted. Failure assessment and repair may only be performed by the APLISENS S.A. service centre. The safety functions cannot be guaranteed in the event of any unauthorised repair.

5. Reliability data

5.1. Reliability data of temperature transmitter

Table 3. Reliability data for LI-24ALW Safety

Configuration	λ_{total} [FIT]	λ_{NE} [FIT]	λ_{SD} [FIT]	λ_{SU} [FIT]	λ_{DD} [FIT]	λ_{DU} [FIT]	SFF [%]	DC [%]	MTBF [years]
1 RTD 2p	1090,199	392,196	112,121	45,585	498,689	41,608	94,039	92,299	104
1 RTD 3p	1090,199	390,976	112,121	45,585	499,909	41,608	94,049	92,316	104
1 RTD 4p	1090,199	389,756	112,121	45,585	501,129	41,608	94,060	92,334	104
2 RTD 2p	1090,199	390,751	112,121	45,585	500,134	41,608	94,051	92,320	104
2 RTD 3p	1090,199	388,516	112,121	45,585	502,369	41,608	94,070	92,351	104
1 TC no CJC	1090,199	392,416	112,121	45,585	498,469	41,608	94,037	92,296	104
1 TC int CJC	1090,199	391,736	112,121	45,585	499,149	41,608	94,043	92,306	104
1 TC ext CJC	1090,199	392,266	112,121	45,585	498,619	41,608	94,038	92,298	104
2 TC no CJC	1090,199	391,616	112,121	45,585	499,269	41,608	94,044	92,307	104
2 TC int CJC	1090,199	391,146	112,121	45,585	499,844	41,608	94,049	92,315	104
2 TC ext CJC	1090,199	390,226	112,121	45,585	500,659	41,608	94,056	92,327	104

Table 4. Intervals of periodic tests for LI-24ALW Safety

Configuration	T[Proof]= 1 year	T[Proof]= 2 years	T[Proof]= 5 years	T[Proof]= 10 years
1 RTD 2p	$PFD_{avg} = 1{,}82\times10^{-4}$	$PFD_{avg} = 3{,}65\times10^{-4}$	$PFD_{avg} = 9{,}11\times10^{-4}$	$PFD_{avg} = 1{,}82\times10^{-3}$
1 RTD 3p	$PFD_{avg} = 1{,}82\times10^{-4}$	$PFD_{avg} = 3{,}65\times10^{-4}$	$PFD_{avg} = 9{,}11\times10^{-4}$	$PFD_{avg} = 1{,}82\times10^{-3}$
1 RTD 4p	$PFD_{avg} = 1{,}82\times10^{-4}$	$PFD_{avg} = 3{,}65\times10^{-4}$	$PFD_{avg} = 9{,}11\times10^{-4}$	$PFD_{avg} = 1{,}82\times10^{-3}$
2 RTD 2p	$PFD_{avg} = 1{,}82\times10^{-4}$	$PFD_{avg} = 3{,}65\times10^{-4}$	$PFD_{avg} = 9{,}11\times10^{-4}$	$PFD_{avg} = 1{,}82\times10^{-3}$
2 RTD 3p	$PFD_{avg} = 1{,}82\times10^{-4}$	$PFD_{avg} = 3{,}65\times10^{-4}$	$PFD_{avg} = 9{,}11\times10^{-4}$	$PFD_{avg} = 1{,}82\times10^{-3}$
1 TC no CJC	$PFD_{avg} = 1{,}82\times10^{-4}$	$PFD_{avg} = 3{,}65\times10^{-4}$	$PFD_{avg} = 9{,}11\times10^{-4}$	$PFD_{avg} = 1{,}82\times10^{-3}$
1 TC int CJC	$PFD_{avg} = 1{,}82\times10^{-4}$	$PFD_{avg} = 3{,}65\times10^{-4}$	$PFD_{avg} = 9{,}11\times10^{-4}$	$PFD_{avg} = 1{,}82\times10^{-3}$
1 TC ext CJC	$PFD_{avg} = 1{,}82\times10^{-4}$	$PFD_{avg} = 3{,}65\times10^{-4}$	$PFD_{avg} = 9{,}11\times10^{-4}$	$PFD_{avg} = 1{,}82\times10^{-3}$
2 TC no CJC	$PFD_{avg} = 1{,}82\times10^{-4}$	$PFD_{avg} = 3{,}65\times10^{-4}$	$PFD_{avg} = 9{,}11\times10^{-4}$	$PFD_{avg} = 1{,}82\times10^{-3}$
2 TC int CJC	$PFD_{avg} = 1{,}82\times10^{-4}$	$PFD_{avg} = 3{,}65\times10^{-4}$	$PFD_{avg} = 9{,}11\times10^{-4}$	$PFD_{avg} = 1{,}82\times10^{-3}$
2 TC ext CJC	$PFD_{avg} = 1{,}82\times10^{-4}$	$PFD_{avg} = 3{,}65\times10^{-4}$	$PFD_{avg} = 9{,}11\times10^{-4}$	$PFD_{avg} = 1{,}82\times10^{-3}$

Systematic Capability	SC 3 (SIL 3 Capable)
Random Capability	Type B Element SIL2@HFT=0; SIL3@HFT=1; Route 1_H

PFH = λ_{DU}
MTTR = MRT = 8h
For the above products, the manufacturer recommends the following intervals of periodic tests: **T[Proof] = 1 year**.

5.2. Failure mode of temperature sensors

Fundamental for optimal safety at the temperature measuring point is the correct construction of sensor, corresponding to the requirements of the process. The next step is the selection of a temperature transmitter suitable for safety systems, that meets the functional safety requirements for a given temperature measurements.

To determine a temperature measuring point adapted to a safety-related system, consider the following:
- the safe state of the device and the safety function of each item must be determined by the user of the device;
- the required safety integrity level must be determined by the operator of the safety system through a risk assessment;
- the sensor operating conditions (process medium, environmental influences) should be precisely specified in order to optimally determine the temperature measurement point;
- follow the instructions provided in the manufacturer's documentation of the used temperature sensor;
- check that the wetted parts are suitable for the measuring medium.

The following failures can occur in a temperature sensors:
- open circuit – the measuring circuit is interrupted;
- short circuit – the measuring circuit is short-circuited (short circuit of the measuring element);
- drift – due to changes in the resistor material or drift in the thermoelectric voltage.

Depending on the possibility of fault detection in the temperature transmitter used, the types of fault intensity coefficients (λ_{SD}, λ_{SU}, λ_{DD}, λ_{DU}) should be determined for various types of temperature sensor defects.

In order to estimate the failure intensities of the whole assembly, i.e. the transmitter with a connected sensor, it is necessary to calculate with the appropriate input configuration of the transmitter with the selected temperature sensor.

Table 5. Detection of sensor failure in temperature transmitters LI-24ALW Safety

Failure mode	RTD 2p	RTD 3p	RTD 4p	TC
Open circuit	λ_{DD}	λ_{DD}	λ_{DD}	λ_{DD}
Short circuit	λ_{DD}	λ_{DD}	λ_{DD}	λ_{DU}
Drift	λ_{DU}	λ_{DU}	λ_{DU}	λ_{DU}

RTD – resistance thermometer;
Xp – sensor in X-wire system;
TC – thermocouple.

5.3. Examples of damage intensity factors in temperature sensors

Examples of types of failure to thermocouples and resistance sensors are given in the literature for various applications and configuration. The failure rates are based on the “worst case” of a sensor failure and serve as guidance for the design of safety instrumented systems. The failure rates should be used taking into account the operating conditions and the connecting cable between the measuring point and the transmitter. They differ depending on the vibration requirements at the site of operation (low stress / high stress) and the type of connection between the measuring point and temperature transmitter.

Examples of failure intensities given in the tables are based on reliability data from the Electrical & Mechanical Component Reliability Handbook by Exida, Third Edition, Volume 1.

Table 6. Failure intensity factors for a resistance sensor 2-wire or 3-wire with close connection without a temperature transmitter

Component use category	The value of the failure intensity factor
Low stress	48,0 FIT
High stress	960,0 FIT

Failure mode	Failure percentage distribution
Open circuit	79,0
Short circuit	3,0
Drift	18,0

Table 7. Failure intensity factors for a resistance sensor 2-wire or 3-wire with distance connection without a temperature transmitter

Component use category	The value of the failure intensity factor
Low stress	475,0 FIT
High stress	9500,0 FIT

Failure mode	Failure percentage distribution
Open circuit	78,0
Short circuit	2,0
Drift	20,0

Table 8. Failure intensity factors for a resistance sensor 4-wire with close connection without a temperature transmitter

Component use category	The value of the failure intensity factor
Low stress	50,0 FIT
High stress	1000,0 FIT

Failure mode	Failure percentage distribution
Open circuit	83,0
Short circuit	5,0
Drift	12,0

Table 9. Failure intensity factors for a resistance sensor 4-wire with distance connection without a temperature transmitter

Component use category	The value of the failure intensity factor
Low stress	500,0 FIT
High stress	10000,0 FIT

Failure mode	Failure percentage distribution
Open circuit	82,0
Short circuit	4,0
Drift	14,0

Table 10. Failure intensity factors for thermocouples with close connection without a temperature transmitter

Component use category	The value of the failure intensity factor
Low stress	100,0 FIT
High stress	2000,0 FIT

Failure mode	Failure percentage distribution
Open circuit	95,0
Short circuit	4,0
Drift	1,0

Table 11. Failure intensity factors for thermocouples with distance connection without a temperature transmitter

Component use category	The value of the failure intensity factor
Low stress	1000,0 FIT
High stress	20000,0 FIT

Failure mode	Failure percentage distribution
Open circuit	90,0
Short circuit	5,0
Drift	5,0

6. History of revision

Revision No.	Document revision	Description of changes
-	01.B.001/2026.02	First version developed by DCF.

APPENDIX A. Safety function tests (Proof Tests)

It is recommended to carry out the safety function tests (Proof Tests) allowing to detect 99% of possible non-diagnosable dangerous transmitter failures.

The manufacturer recommends the interval of periodic tests **T[Proof] = 1 year**.

The Proof Test is performed using the **RAPORT 2** software with the **SIL PROOF TEST** plugin, developed by APLISENS S.A.

List of Proof Test steps:

1. Configure the PLC operating in the safety loop to a mode enabling to skip measurements and alarms from the transmitter used in the test.
2. Check the physical condition of the transmitter housing and replace the hardened or damaged gaskets and glands.
3. Check the condition of electrical connections (reliability of wire connections to terminals).
4. Run **Raport 2** software developed by APLISENS S.A. on a WINDOWS® PC. Connect a HART/USB modem manufactured by APLISENS S.A. or any other BELL 202 compatible modem to the computer. Connect the power supply, modem and ammeter "**mA**" to the power loop of the tested transmitter in accordance with the diagram in **Figure 1**. Connect a substitute temperature sensor to the transmitter measuring terminals according to the transmitter configuration. Supply the transmitter with a 16 V DC voltage measured at the power supply unit terminals.

   WINDOWS ® is a trademark of Microsoft Corporation.

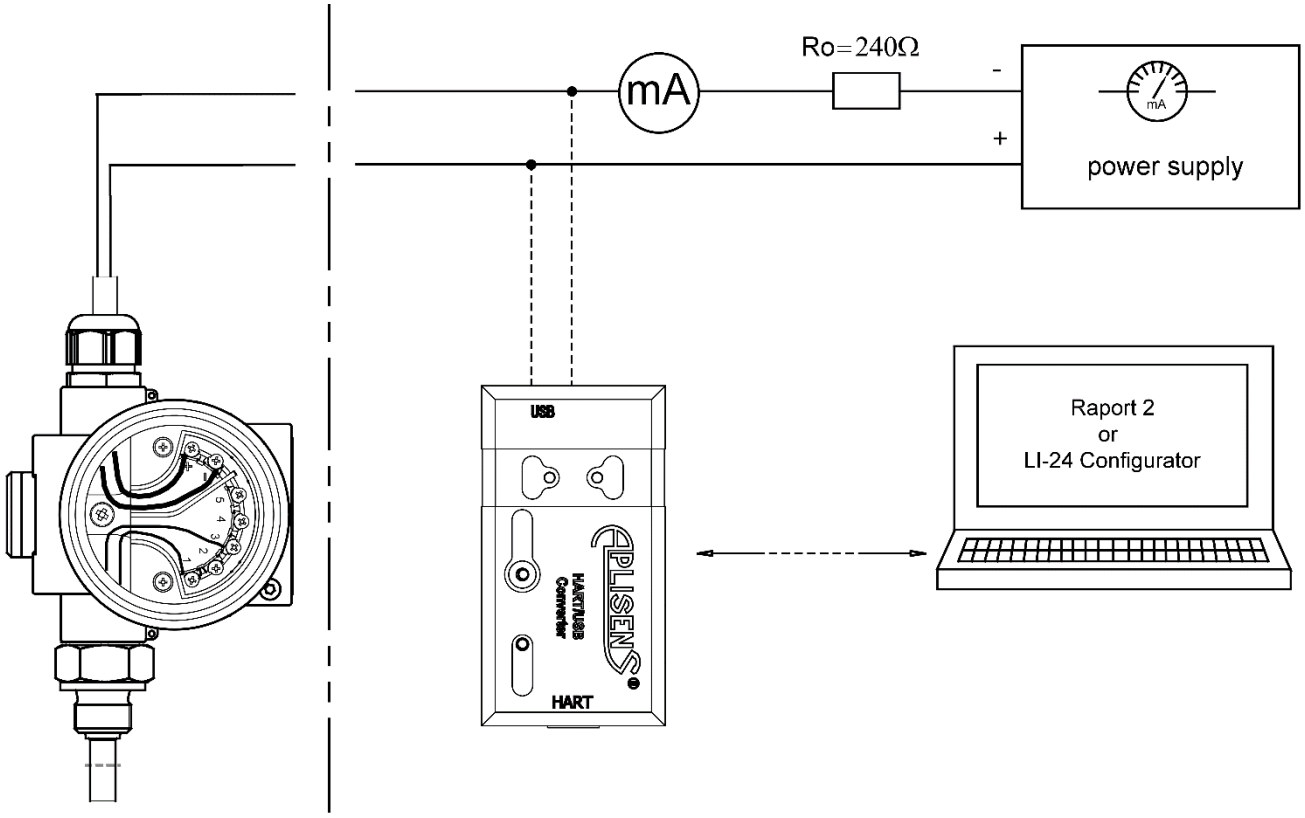

Figure 1. Diagram of transmitter connection to the current loop for testing

Identify the transmitter and open the "**SIL Proof Test**" tab. Remove software write protection to the transmitter using a HART command. For this purpose, select the "**Write lock**" in the "**SIL Proof Test**" tab. The test wizard will be launched. Follow the instructions of the wizard which in the next steps will ask about operator's intentions and perform the necessary actions.

5. The purpose of the test is to validate the operation of the process current controller in the transmitter and to validate the current diagnostic system in the 4 … 20 mA current loop. To perform the analog output tests of current loop, select the "**SIL Proof Test**" tab and the "**Analog Output Test**" menu option. The test wizard will be launched. Follow the instructions of the wizard, which will carry out the tests of the digital-to-analog converter, the current controller, and the current loop control circuit. The wizard will instruct to:

5.1. Supply the transmitter with a 16 V DC voltage measured at the power supply unit terminals. Using a HART command, the transmitter current output is set to 20,660 mA corresponding to the maximum safe transmitter current. Using a reference DC milliammeter "**mA**" of accuracy class ≤ 0,025 and internal resistance of ≤ 10 Ω connected to the current loop, read the current flowing in the line. This test, in addition to checking the alarm current value, detects any problems related to the minimum supply voltage of the transmitter's power supply, which may be caused by voltage drops on the power line resistance or the power source resistance.

5.2. When the current output is set to 20,660 mA, the test wizard reads the **PVIret** parameter. The permissible deviation of the **PVIret** parameter is ±0,160 mA.

5.3. Using a HART command, the transmitter current output is set to 12,000 mA. Using a reference DC milliammeter "**mA**" of accuracy class ≤ 0,025 connected to the current loop, read the current flowing in the line. This test detects possible problems in the digital to analog converting circuit (e.g. due to failure of the internal component).

5.4. Using a HART command, the transmitter current output is set to 3,440 mA corresponding to the I_ALARM_L alarm current (minus the permissible error of 1%, i.e. 0,160 mA). Using a reference DC milliammeter "**mA**" of accuracy class ≤ 0,025 connected to the current loop, read the current flowing in the line. This test detects any problems related to excessive idle current drawn by the transmitter (e.g. due to an internal component failure).

If the results of the measurements do not meet the assumed parameters, the test wizard recommends performing a calibration procedure for the transmitter analogue output.



If, when the calibration procedure has been performed correctly, the transmitter measurement continues to show a current value deviating from the expected value (taking into account the permissible deviation as stated in the user's manual), the transmitter must be returned immediately to the manufacturer for repair.

6. Process temperature measurement tests.

The purpose of the test is to validate the accuracy of the temperature process variable measurement by simulating an electrical value at the temperature transmitter measurement input. Check the process temperature measurement function for the range and configuration used in the process safety loop, using a temperature calibrator of the required accuracy class, properly connected to the configured measuring terminals of the temperature transmitter. For this purpose, from the "**SIL Proof Test**" tab, select the "**Temperature measurement test**" option. The test wizard will be launched. Follow the instructions of the wizard, which will carry out the temperature tests in the next steps. The transmitter will start the test from reading the input configuration, sensor type, temperature measurement range. If the measured current value in the test items **6.1**, **6.2** or **6.3** deviates from the expected values (considering the permissible error), a 2-point temperature calibration procedure shall be performed. The calibration procedure shall be performed with a temperature calibrator of the required accuracy class, connected to the properly configured temperature transmitter measuring terminals. After the calibration, perform the steps of section **6** again. The wizard will instruct to:

6.1. Supply the transmitter with a 16 V DC voltage measured at the power supply unit terminals. Using the temperature calibrator, apply a reference signal to the transmitter corresponding to 4 mA (0% of the set temperature range) and with the milliammeter "**mA**" of accuracy class ≤ 0,025 and internal resistance ≤ 10 Ω, perform current measurement in the current loop.

6.2. Using the temperature calibrator, apply a reference signal to the transmitter corresponding to 12 mA (50% of the set temperature range) and with the milliammeter "**mA"** of accuracy class ≤ 0,025 and internal resistance ≤ 10 Ω, perform current measurement in the current loop.

6.3. Using the temperature calibrator, apply a reference signal to the transmitter corresponding to 20 mA (100% of the set temperature range) and with the "milliammeter "**mA**" of accuracy class ≤ 0,025 and internal resistance ≤ 10 Ω, perform current measurement in the current loop.



If, despite the 2-point temperature calibration performed, the measured current value in items **6.1**, **6.2** or **6.3** still deviates from the expected value (taking into account the permissible deviation as stated in the user's manual), **the test is not completed successfully, and the transmitter must be returned to the manufacturer for repair.**

7. Tests for measurement of Cold Junction Compensating (CJC) and ambient temperature.

7.1. Short-circuit the transmitter measuring terminals marked ①, ②, ③. Supply the transmitter with a 16 V DC voltage measured at the power supply unit terminals. The purpose of the test is to validate the ambient temperature measurement carried out by the transmitter based on the temperature measurement carried out by the internal ADC converter sensor, and to validate the internal Cold Junction Compensating (CJC) temperature measurement sensor. For this purpose, after stabilising thermal conditions at a temperature of 15 – 25°C, measure the temperature of the transmitter body with a reference electronic thermometer of at least "B" accuracy class. The "stable thermal conditions" are understood as ensuring a relatively stable and uniform temperature of the transmitter body.

7.2. On the "**SIL Proof Test**" tab, select the "**Environment tests**" option. The test wizard will be launched. Follow the instructions of the wizard, which will carry out the tests in the next steps. The software will properly configure the transmitter for test and read the 1st, 2nd, 3rd and 4th process variables (PV, SV, TV, FV). They correspond successively to the process temperature (PV), the primary sensor temperature (SV), the secondary sensor temperature (TV) and the ADC converter temperature (FV). After completing the test, the wizard will restore the previous configuration of the transmitter.



If, as a result of correctly performed test procedure, the PV, SV, TV, FV temperature values deviate by more than 5°C from the temperature measured using the reference electronic thermometer, **the transmitter must be immediately returned to the manufacturer for repair.**

8. Tests of diagnostics for open circuit in the sensor circuit.

8.1. The purpose of the test is to check correct operation of diagnostics of an interruption in the galvanic connection to the temperature measurement sensor. Depending on the temperature sensor configuration used in the measurement process, substitute sensors simulating field sensors shall be connected to the respective transmitter measuring terminals. Supply the transmitter with a 16 V DC voltage measured at the power supply unit terminals. Follow the instructions of the wizard, which in the following steps will indicate an interruption in the connection between the sensor and the specified measuring terminal. The result of an interruption should be an alarm current of nominally 3,440 mA.



If, with a correctly performed test procedure, the transmitter fails to behave as described in the test wizard, **it must be immediately returned to the manufacturer for repair.**

9. Alarm module tests.

9.1. The purpose of the test is to check the operation of the alarm module. On the "**SIL Proof Test**" tab, select the "**Alarm modules test**" option. Depending on the temperature sensor configuration used in the measurement process, substitute sensors simulating field sensors shall be connected to the respective transmitter measuring terminals. Supply the transmitter with a 16 V DC voltage measured at the power supply unit terminals. Follow the instructions of the wizard, which will carry out the primary and backup alarm modules tests in the next steps. The result of the test should be an alarm current of nominally 3,440 mA, or in the case of a critical alarm, an alarm current of approximately 0,300 mA.



If, with a correctly performed test procedure, the transmitter fails to behave as described in the test wizard, **it must be immediately returned to the manufacturer for repair.**

10. Set the software write protection to the transmitter using a **HART** command (Raport 2 software developed by APLISENS S.A.). For this purpose, select the "**Write lock**" in the "**SIL Proof Test**" tab. The operation wizard will be launched. Follow the instruction of the wizard which in the next steps will ask about operator's intentions and perform the necessary actions. After successful tests completion, the test wizard will generate a test report and set the transmitter to the stand-by mode for connection to the functional safety loop.

11. Install the transmitter and connect the sensors to it as intended. Configure the PLC operating in the safety loop in a mode enabling to read measurements and alarms from the transmitter used in the test. Record and archive the test results.

The checklist for performing the Proof Test is available in the **Proof Test** software.

APPENDIX B. The Proof test block diagram

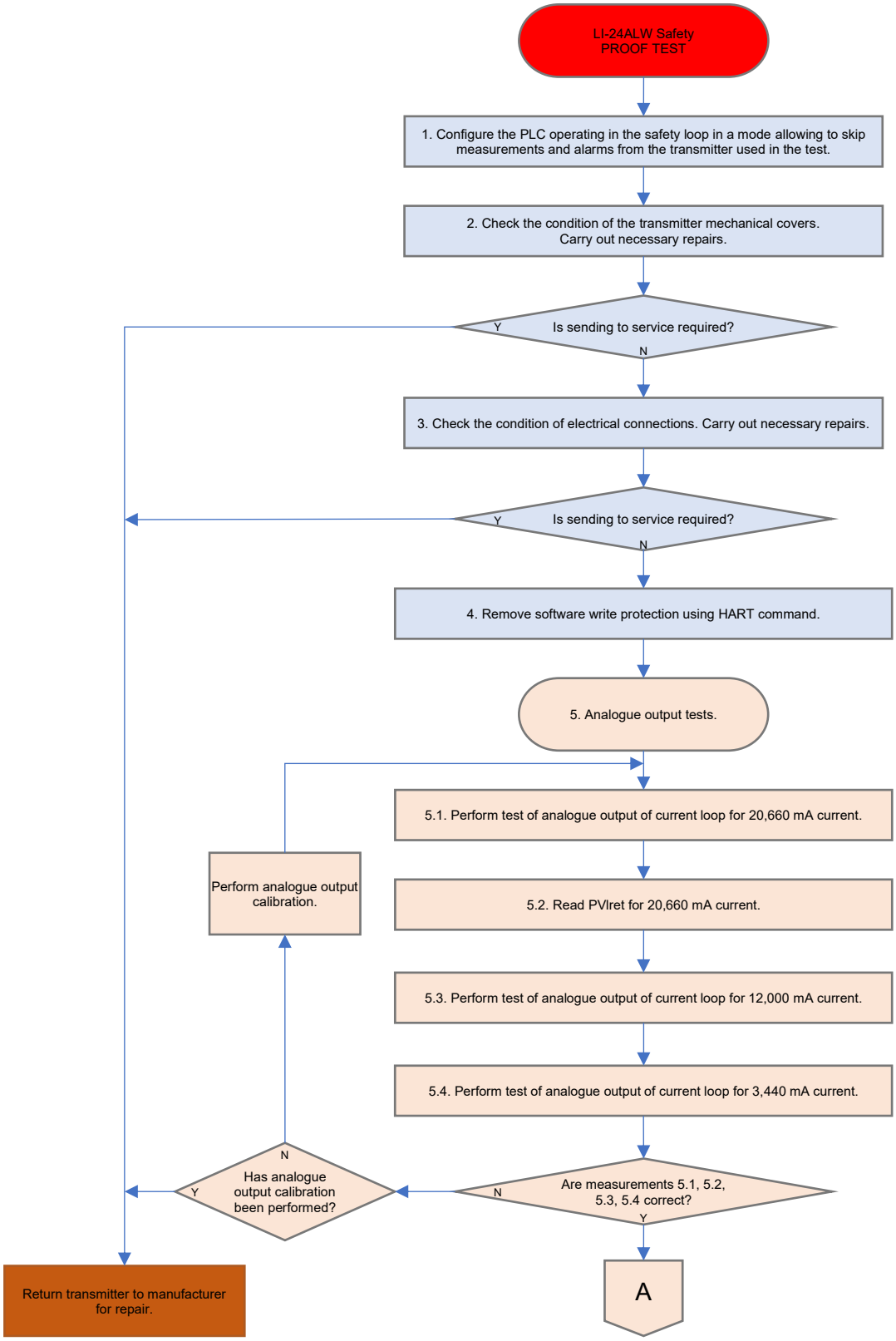

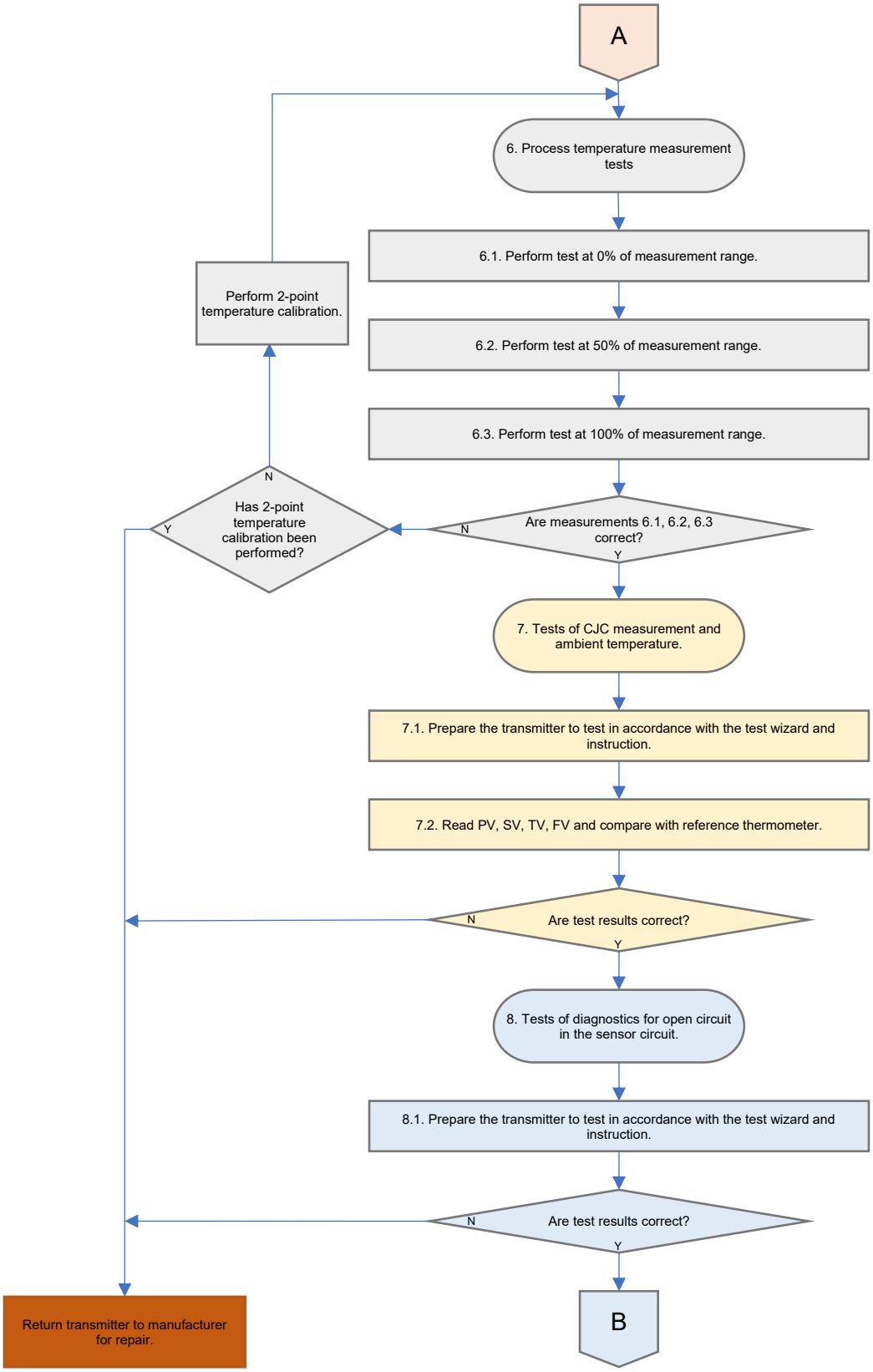
A
6. Process temperature measurement tests
6.1. Perform test at 0% of measurement range.
6.2. Perform test at 50% of measurement range.
6.3. Perform test at 100% of measurement range.
Are measurements 6.1, 6.2, 6.3 correct?
N
Y
Has 2-point temperature calibration been performed?
N
Y
Perform 2-point temperature calibration.
7. Tests of CJC measurement and ambient temperature.
7.1. Prepare the transmitter to test in accordance with the test wizard and instruction.
7.2. Read PV, SV, TV, FV and compare with reference thermometer.
Are test results correct?
N
Y
8. Tests of diagnostics for open circuit in the sensor circuit.
8.1. Prepare the transmitter to test in accordance with the test wizard and instruction.
Are test results correct?
N
Y
Return transmitter to manufacturer for repair.
B

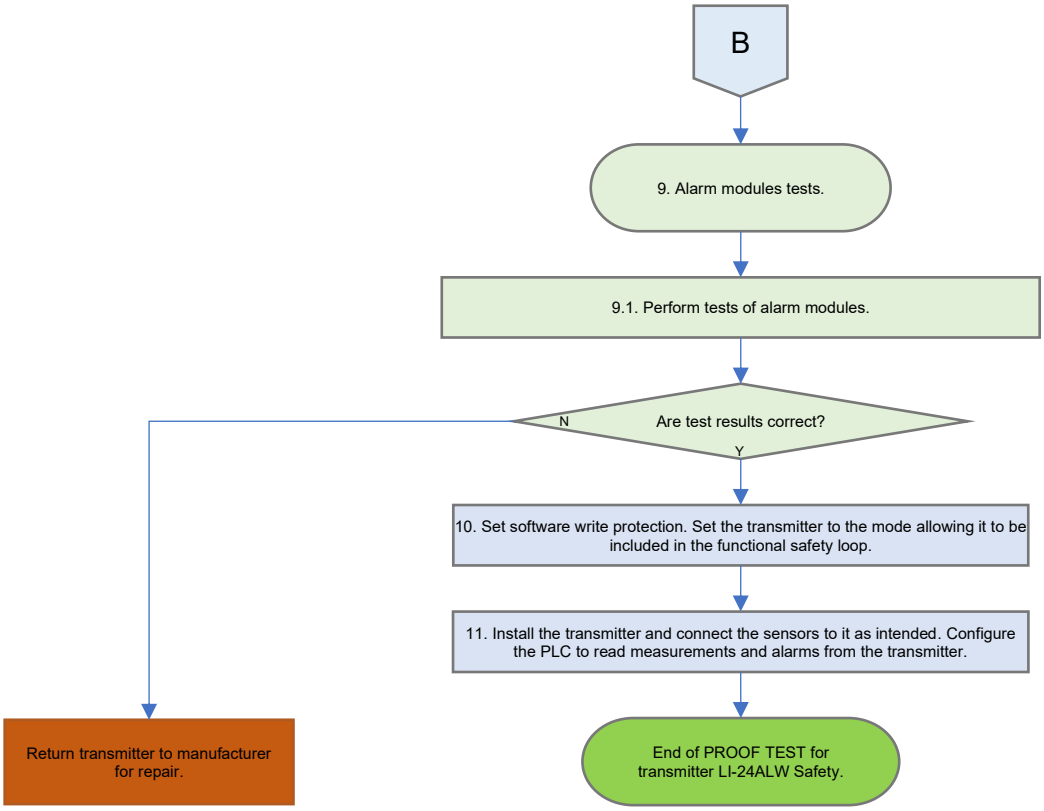
B
9. Alarm modules tests.
9.1. Perform tests of alarm modules.
N
Are test results correct?
Y
10. Set software write protection. Set the transmitter to the mode allowing it to be included in the functional safety loop.
11. Install the transmitter and connect the sensors to it as intended. Configure the PLC to read measurements and alarms from the transmitter.
Return transmitter to manufacturer for repair.
End of PROOF TEST for transmitter LI-24ALW Safety.